Mechanical Data

- Surface Mount Package
- Weight: 0.005 grams (Approximate)
- Moisture Sensitivity Level Refer to Product Datasheet
- Halogen Free. “Green” Device (Note 1)
- Epoxy Meets UL 94 V-0 Flammability Rating
- Lead Free Finish/RoHS Compliant (Note2) ("P" Suffix Designates RoHS Compliant. See Ordering Information)

Note:1. free "Green" products are defined as those which contain <900ppm bromine, <900ppm chlorine (<1500ppm total Br + Cl) and <1000ppm antimony compounds.
2. High Temperature Solder Exemption Applied, see EU Directive Annex 7a.

Package 3D Photo

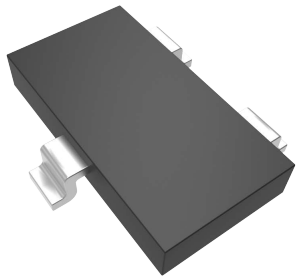

Package Outline Dimensions

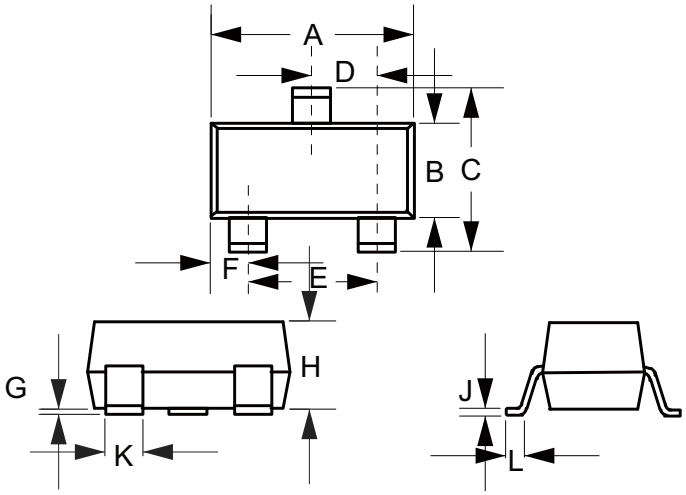

DIMENSIONS					
DIM	INCHES		MM		NOTE
	MIN	MAX	MIN	MAX	
A	0.071	0.087	1.80	2.20	
B	0.045	0.053	1.15	1.35	
C	0.083	0.096	2.10	2.45	
D	0.026		0.65		TYP.
E	0.047	0.055	1.20	1.40	
F	0.012	0.016	0.30	0.40	
G	0.000	0.004	0.00	0.10	
H	0.035	0.044	0.90	1.10	
J	0.002	0.010	0.05	0.25	
K	0.006	0.016	0.15	0.40	
L	0.010	0.018	0.26	0.46	

Suggested Solder Pad Layout

Unit:mm

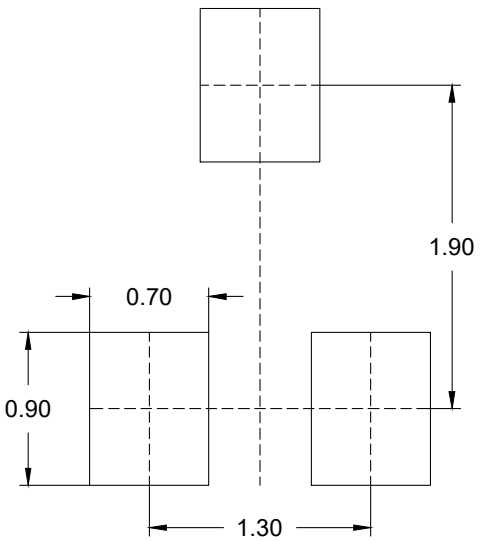

Notes:
1.The suggested land pattern dimensions have been provided for reference only.
2.For further information,please reference document IPC-7351A.

Packing Quantity

Package	Tape Width (mm)	Reel Size (inch)	Reel Quantity	BOX Quantity	Carton Quantity	Packing	Ordering Information
SOT-323	8	7	3000	30K	120K		Part Number-TP
		13	10000	10K	160K	General	Part Number-13P
				20K	100K	ESD Bag	

Note 1: These are minimum package quantities only. Minimum orders will differ. Contact the factory for more information on minimum order quantities.
Note 2: MCC Tape&reel products meets EIA-481 REV D specification.

Device Tape Orientation

Package	Tape Width (mm)	Tape Orientation
SOT-323	8	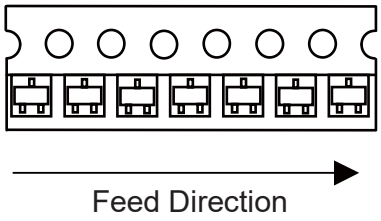

Embossed Carrier Tape Specifications

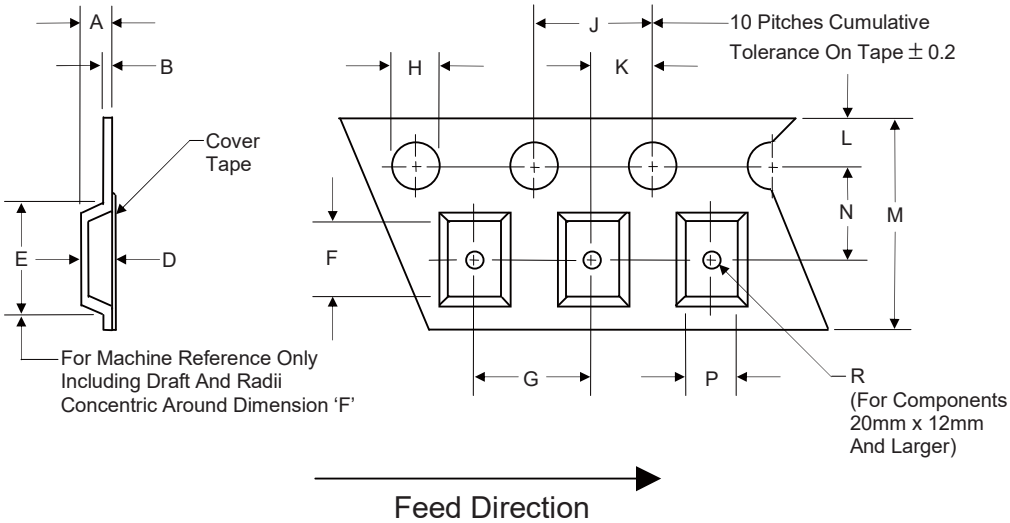

Tape Width	H	L	J	B	D	F	P
8mm	1.5	1.75	4.0	0.6	See Note 3		
(Tolerance)	+0.1/-0	±0.1	±0.1	Max			

Tape Width	E	R	N	A	K	M	G
8mm	4.2	1.0	3.5	2.4	2.0	8.0	4.0
(Tolerance)	Max	Min	±0.05	Max	±0.05	±0.3	±0.1

Note 3: D,F,P are determined by constant size. The clearance between the parrt and the tape cavity must be within 0.05mm min. to 0.50mm max. for 8mm tape.

Embossed Carrier Tape Specifications

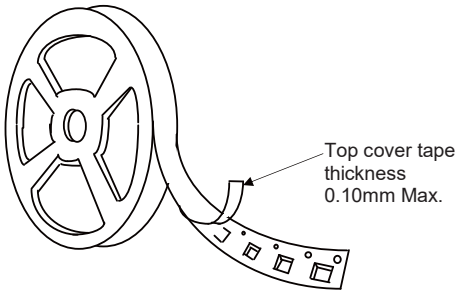

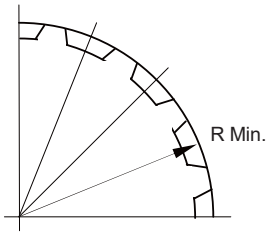

Bending Radius

Tape Size	R Min.
8mm	25mm

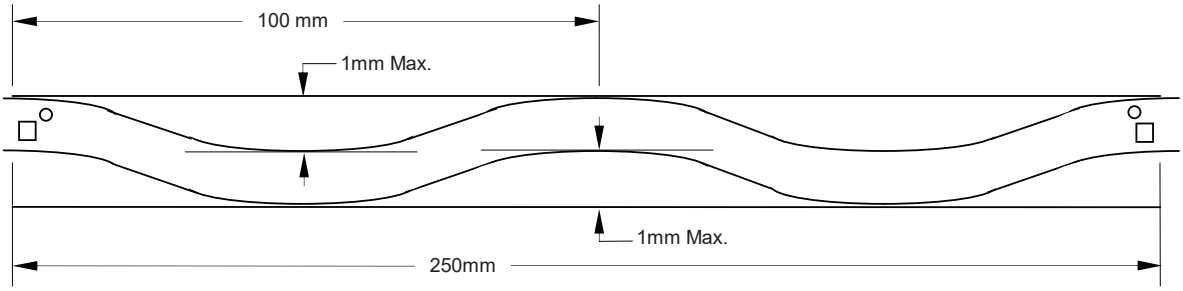

Camber (Top View)

Allowable camber to be 1mm/100mm non-accumulative over 250mm

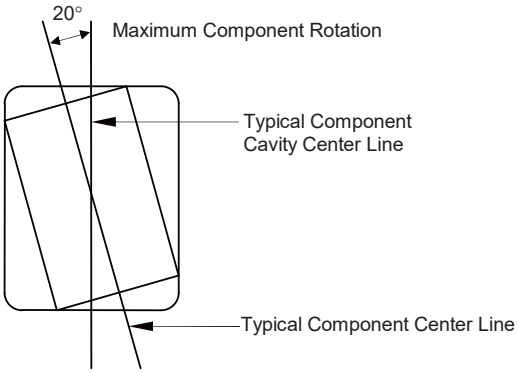

Start and Finish Specification

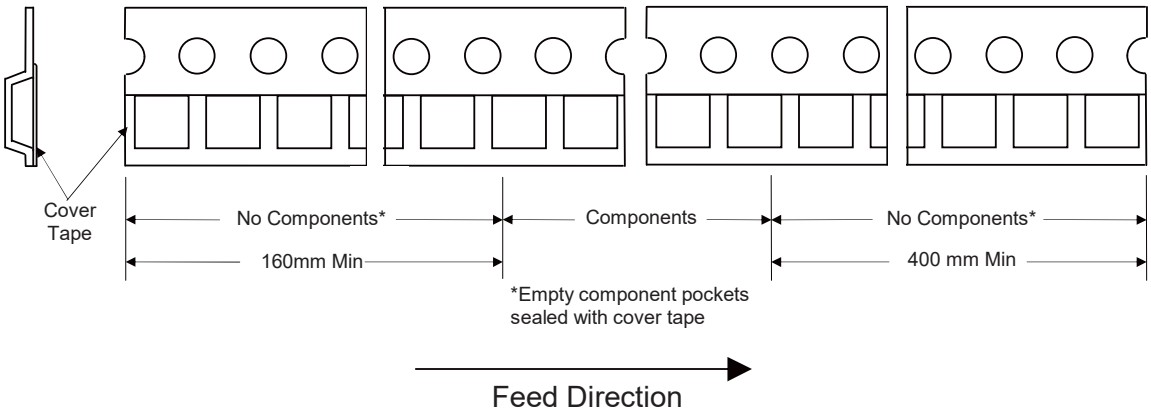

Surface Mount Reel Specifictions

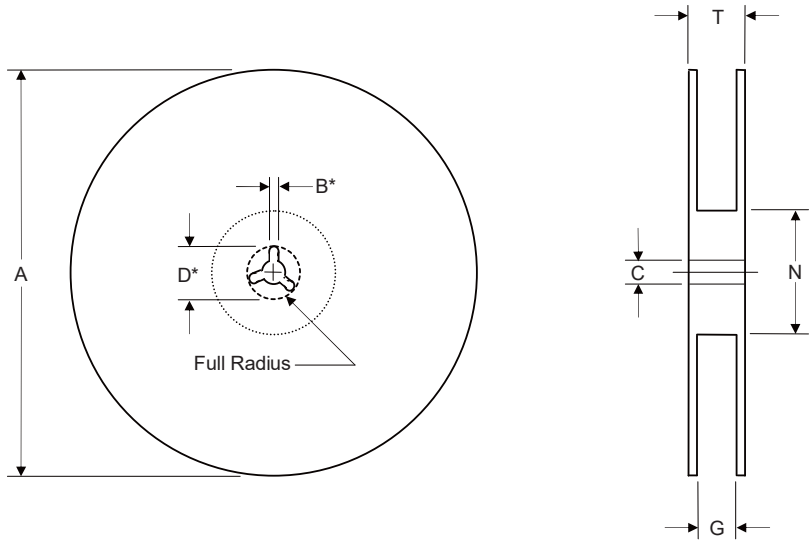

* Drive spoke dimensions optional. If drive spoke is used then asterisked dimensions apply.

Tape Width	A	B	C	D	N	G	T
8mm	180/335	1.5	13.0	20.2	55/100	8.4	14.4
(Tolerance)	Max	Min	±0.2	Min	±5.0	+1.5	Max

Dimensions

Inbox Size

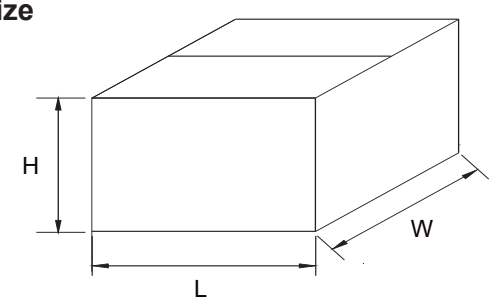

Dimension	Specification(mm typical)			
	General		ESD MBB Bag	
Reel Size	7 inch	13 inch	7 inch	13 inch
L	187	342	245	370
W	130	342	145	340
H	187	22	202	55

Carton Size

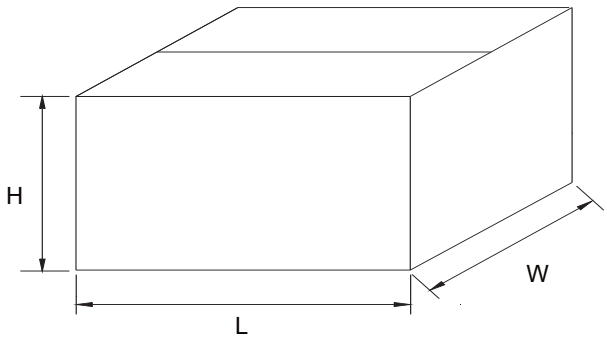

Dimension	Specification(mm typical)			
	General		ESD MBB Bag	
Reel Size	7 inch	13 inch	7 inch	13 inch
L	390	395	510	385
W	275	360	305	365
H	207	366	235	315